TPR ENTERPRISES, LTD.®

TPR WATERPROOF FIBER END FITTINGS



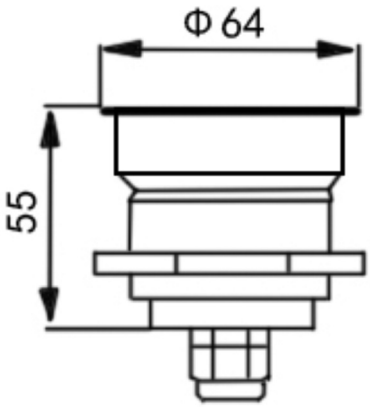

TPR–WEF–22

Specifications:

IP Rating:	IP68
Material:	SS–304
Size:	55mm x 64mm
Weight:	504g
Fiber Size:	100 x 0.75mm



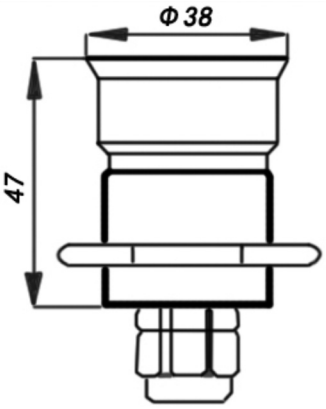

TPR–WEF–23

Specifications:

IP Rating:	IP68
Material:	SS–304
Size:	47mm x 38mm
Weight:	210g
Fiber Size:	50 x 0.75mm



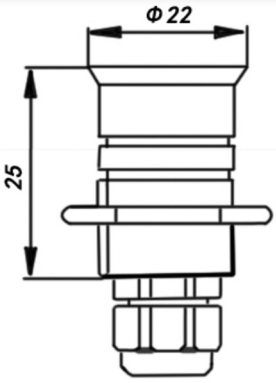

TPR–WEF–26

Specifications:

IP Rating:	IP68
Material:	SS–304
Size:	25mm x 22mm
Weight:	42g
Fiber Size:	25 x 0.75mm

168 Irving Ave, Suite 304F, Port Chester, NY 10573 | PHONE: 914.698.1141 | FAX: 914.305.1926 | E-MAIL: info@tprlights.com | www.tprlights.com

© TPR Enterprises, LTD.